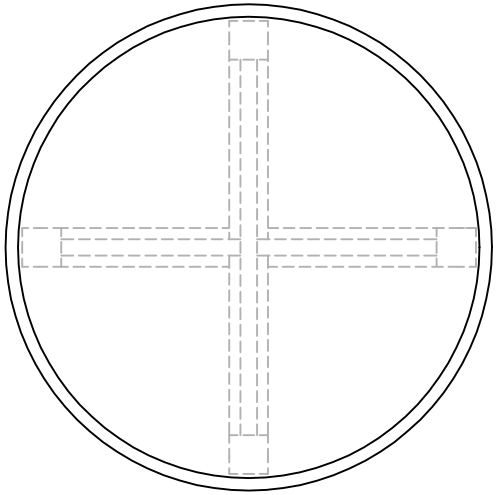

PLAN VIEW

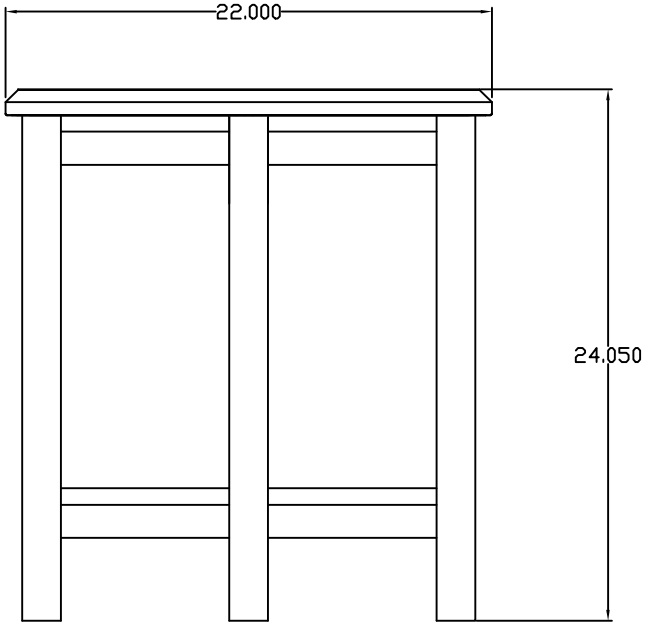

ELEVATION

SERIES	C130LM LODGE	JOB# TBD	QTY. TBD	SCHU IND. INC.	DRAWN BY RV
PRODUCT DESCR	22" DIA. END TABLE	PRODUCT # C130LM-T5-S2701	ERP# S2701	DWG.# XXXX	REV. 11/3/15
PART DESCR.	OVERALL	APPROVED BY XXXX	DUE DATE XXXX	DATE 3/20/13	